NOTICE OF FILING

Details of Filing

Document Lodged:	Statement of Claim - Form 17 - Rule 8.06(1)(a)
Court of Filing	FEDERAL COURT OF AUSTRALIA (FCA)
Date of Lodgment:	20/12/2024 5:31:19 PM AEDT
Date Accepted for Filing:	23/12/2024 9:10:06 AM AEDT
File Number:	NSD1010/2022
File Title:	LEAH MAREE GREENTREE & Ors v JAGUAR LAND ROVER AUSTRALIA PTY LTD ACN 004 352 238
Registry:	NEW SOUTH WALES REGISTRY - FEDERAL COURT OF AUSTRALIA



Registrar

Important Information

This Notice has been inserted as the first page of the document which has been accepted for electronic filing. It is now taken to be part of that document for the purposes of the proceeding in the Court and contains important information for all parties to that proceeding. It must be included in the document served on each of those parties.

The date of the filing of the document is determined pursuant to the Court's Rules.

Form 17

Rule 8.05(1)(a)

AMENDED CONSOLIDATED STATEMENT OF CLAIM

No. NSD 1010 of 2022

Federal Court of Australia

District Registry: New South Wales

Division: General

Leah Maree Greentree and others

Applicants

Jaguar Land Rover Australia Pty Ltd (ACN 004 352 238)

First Respondent

Jaguar Land Rover Limited (company number 016 720 70)

Second Respondent

Filed on behalf of	The Applicants
Prepared by	Lee Taylor / Matt Mackenzie
Law firm	Maurice Blackburn and Quinn Emanuel ~~Gilbert + Tobin~~ (as agent)
Tel	(03) 9605 2700 Fax (03) 9258 9600
Email	ltaylor@mauriceblackburn.com.au, matthewmackenzie@quinnemanuel.com ~~mmackenzie@gtlaw.com.au~~
Address for service	Level 21, 380 La Trobe St, Melbourne VIC 3000

[Form approved 01/08/2011]

TABLE OF CONTENTS

A.	PARTIES		3
	A.1	The applicants and Group Members	3
	A.2	The respondents	6
B.	DESIGN OF THE DPF SYSTEM IN THE AFFECTED VEHICLES		8
	B.1	Overview	8
	B.2	Key physical components of the DPF System	9
	B.3	Other features of the DPF System	12
	B.4	Accumulation of particulate matter in the DPF	13
	B.5	Regeneration	13
C.	THE VEHICLE DEFECTS		18
D.	THE APPLICANTS' AFFECTED VEHICLES		27
E.	JLRA AND JLR UK'S REPRESENTATIONS		31
	E.1	Vehicle Representations	31
	E.2	Future Vehicle Representations	34
F.	JLRA AND JLR UK'S OMISSIONS		35
G.	FAILURE TO COMPLY WITH STATUTORY GUARANTEE AS TO ACCEPTABLE QUALITY		35
H.	MISLEADING OR DECEPTIVE CONDUCT		37
I.	~~LOSS OR DAMAGE SUFFERED BY THE~~ APPLICANTS' AND GROUP MEMBERS' ENTITLEMENTS TO DAMAGES		39
J.	RELIEF		43

A. PARTIES

A.1 The applicants and Group Members

1 This proceeding is commenced as a representative proceeding against the first respondent (**JLRA**) and the second respondent (**JLR UK**), pursuant to Part IVA of the *Federal Court of Australia Act 1976* (Cth) (**FCA Act**) by the applicants on their behalf and on behalf of other persons (**Group Members**) who:

(a) at any time during the period commencing on 1 July 2015 to the date upon which this Amended Consolidated Statement of Claim was filed (**Relevant Period**), in Australia, acquired (by way of purchase or lease), or obtained title to, a Jaguar or Land Rover motor vehicle having:

(i) a diesel combustion engine; and

(ii) a diesel exhaust after-treatment system designed to comply with emissions standards set out in EC (European Commission) Regulation No. 715/2007 (**Euro 6 Standards**); and

(iii) a:

(A) 'D8' vehicle platform;

(B) 'D7u' vehicle platform;

(C) 'D7a' vehicle platform;

(D) 'PTA' vehicle platform; or

(E) 'MLA' vehicle platform,

(**Affected Vehicle**); and

Particulars

(i) Affected Vehicles include the following model lines and vehicle codes:

(A) Land Rover Discovery Sport, model year 2017 to 2022 (L550);

(B) Land Rover Range Rover Evoque, model year 2016 to 2019 (L538);

(C) Land Rover Range Rover Evoque, model year 2020 to 2022 (L551);

(D) Jaguar E-Pace, model year 2018 to 2020 (X540);

(E) Land Rover Discovery, model year 2017 to 2024 (L462);

(F) Range Rover Sport, model year 2017 to 2022 (L494);

(G) Range Rover Sport, model year 2023 to 2024 (L461);

(H) Range Rover, model year 2017 to 2022 (L405);

(I) Range Rover, model year 2022 to 2024 (L460);

(J) Land Rover Defender, model year 2020 to 2024 (L663);

(K) Jaguar F-Pace, model year 2017 to 2021 and 2023 to 2024 (X761);

(L) Jaguar XE, model year 2016 to 2019 (X760);

(M) Jaguar XF, model year 2016 to 2020 (X260); and

(N) Range Rover Velar, model year 2018 to 2025 ~~2024~~ (L560).

(ii) Further particulars may be provided following discovery and expert evidence.

(b) either:

(i) acquired the Affected Vehicle:

(A) from JLRA, an authorised JLRA dealership (**Dealer**) or other retailer (including used car dealers);

(B) other than by way of sale by auction; and

(C) other than for the purpose of re-supply; or

(ii) acquired the Affected Vehicle other than for the purpose of re-supply from a person who acquired the Affected Vehicle in the circumstances described in paragraph 1(b)(i) above; or

(iii) obtained title to the Affected Vehicle that another person had previously acquired in the circumstances described in paragraph 1(b)(i) above; and

(c) are not:

(i) a person described in subsection 33E(2) of the FCA Act; or

(ii) a Justice of the Federal Court of Australia or the High Court of Australia.

2 As at the date of the commencement of this proceeding, there are seven or more Group Members.

3 The first and second applicants jointly acquired an Affected Vehicle, being a MY17 Land Rover Discovery Sport 2.0L TD4 150 SE (**Greentree Affected Vehicle**), on or around 15 February 2017, other than by way of sale by auction and other than for the purpose of re-supply.

Particulars

(i) The first and second applicants purchased the Greentree Affected Vehicle on or around 15 February 2017 from Tuntrent Pty Ltd atf the McGuigan Trust (ACN 002 056 500) trading as Port Macquarie Land Rover (**Port Macquarie Land Rover**), an authorised JLRA dealership, in Port Macquarie, New South Wales.

(ii) The first and second applicants paid $65,000.01 to purchase the Greentree Affected Vehicle, comprising:

(A) $50,088.01 for the vehicle, inclusive of GST;

(B) $3,300.00 for dealer delivery charges;

(C) $9,340.00 for other add-ons and/or accessories;

(D) $32.00 for on road charges; and

(E) $2,240.00 for stamp duty.

(iii) The Greentree Affected Vehicle bore VIN number SALCA2AN8HH652371.

3A The third applicant acquired an Affected Vehicle, being a MY20 Land Rover Discovery Sport S 2.0D I4 150 PS (**Jennings Affected Vehicle**, and together with the Greentree Affected Vehicle, the **Applicants' Affected Vehicles**), on or around 25 May 2021, other than by way of sale by auction and other than for the purpose of re-supply.

Particulars

(i) The third applicant purchased the Jennings Affected Vehicle on or around 25 May 2021 from Rockhampton Jaguar Land Rover, an authorised JLRA dealership, in Rockhampton, Queensland.

(ii) The third applicant paid $81,370 to purchase the Jennings Affected Vehicle, comprising:

(A) $71,997.15 for the vehicle, inclusive of GST;

(B) $1,950.00 for the transfer fee;

(C) $1,562.15 for luxury car tax;

(D) $1,978.70 for on road charges;

(E) $2,502.00 for stamp duty;

(F) $401.00 for credit fees and charges; and

(G) $979.00 for the dealer origination fee.

(iii) The Jennings Affected Vehicle bore VIN number SALCA2AN1LH830887.

(iv) The Jennings Affected Vehicle was a demonstrator model and, at the time of purchase, had travelled approximately 15,584 kilometres.

(v) The third applicant purchased the Jennings Affected Vehicle with finance from Toyota Finance, with a loan period of 60 months and interest rate of 6.86%.

A.2 The respondent<u>s</u>

4 JLR<u>A</u> is, and throughout the Relevant Period was:

(a) a corporation incorporated in Australia;

(b) a trading corporation within the meaning of section 4(1) of the *Competition and Consumer Act 2010* (Cth) (**CCA**); and

(c) ~~the~~ <u>a</u> manufacturer of the Affected Vehicles, within the meaning of section 7 of the *Australian Consumer Law* (**ACL**) (being Schedule 2 of the CCA), in that:

(i) JLR<u>A</u> imported the Affected Vehicles into Australia;

(ii) JLR<u>A</u> was not (but for the operation of section 7 of the ACL) the manufacturer of the Affected Vehicles; and

(iii) at the time of importation, the manufacturer of the Affected Vehicles did not have a place of business in Australia.

4A. JLR UK is, and throughout the Relevant Period was:

(a) a corporation incorporated in the United Kingdom;

(b) a trading corporation within the meaning of section 4(1) of the CCA;

(c) a body corporate carrying on business within Australia within the meaning of section 5(1)(g) of the CCA;

Particulars

(i) JLR UK is the owner and author of the website accessible at the URL "www.jaguar.com.au" (**Jaguar Australia Website**) and the website accessible at the URL "www.landrover.com.au" (**Land Rover Australia Website**), which advertise and market Jaguar and Land Rover branded vehicles in Australia.

(ii) JLR UK is the owner and author of content on social media channels which advertise and market Jaguar and Land Rover branded vehicles and which are accessible to the public, including in Australia.

(iii) Further particulars may be provided following discovery.

(d) a manufacturer of the Affected Vehicles, within the meaning of section 7 of the ACL, in that:

(i) JLR UK produced and/or assembled the Affected Vehicles;

(ii) JLR UK held itself out to the public as the manufacturer of the Affected Vehicles;

(iii) JLR UK caused or permitted the "Jaguar" or "Land Rover" names, brands and/or marks to be applied to the Affected Vehicles imported into Australia by JLRA; and

(iv) JLR UK caused or permitted JLRA, in connection with the supply or possible supply of the Affected Vehicles by JLRA and the promotion by JLRA of the supply or possible supply of the Affected Vehicles, to hold out JLR UK to the public as the manufacturer of the Affected Vehicles;

(e) a corporation that did not have a place of business in Australia; and

(f) the parent company of JLRA.

B. DESIGN OF THE DPF SYSTEM IN THE AFFECTED VEHICLES

B.1 Overview

5 Each of the Affected Vehicles is fitted with a diesel combustion engine.

6 The operation of a diesel combustion engine generates four principal pollutant emissions: (i) carbon monoxide; (ii) oxides of nitrogen (**NO_x**), including nitrogen dioxide (**NO_2**) and nitric oxide (**NO**); (iii) hydrocarbons; and (iv) particulate matter (together, **Pollutant Emissions**).

7 Throughout the Relevant Period, the emission of Pollutant Emissions by the Affected Vehicles was regulated by emissions standards.

Particulars

(i) In respect of new light-duty vehicles sold in the United Kingdom and European Union, the emission of Pollutant Emissions was regulated by the Euro 6 Standards.

(ii) In respect of new light-duty vehicles sold in Australia, the emission of Pollutant Emissions was regulated by:

(A) Vehicle Standard (Australian Design Rule 79/03 - Emission Control for Light Vehicles) 2011 (**ADR 79/03**), for vehicles manufactured on or after 1 November 2013 but before 1 November 2016; and

(B) the Vehicle Standard (Australian Design Rule 79/04 – Emission Control for Light Vehicles) 2011 (**ADR 79/04**), for vehicles manufactured on or after 1 November 2016;

(iii) ADR 79/03 and ADR 79/04 adopted the United Nations Regulation UN-R83 Revision 4, known as “Euro 5” emissions standards.

8 In order to comply with applicable emissions standards, each of the Affected Vehicles was fitted with a diesel exhaust after-treatment system designed to capture and convert Pollutant Emissions into carbon dioxide and water vapour through a combination of filtration, combustion and chemical reactions (**DPF System**).

Particulars

Because the model lines comprising the Affected Vehicles were sold in both the Australian market and the European market, they contained a DPF

System that was designed to comply with the more stringent Euro 6 Standards.

B.2 Key physical components of the DPF System

9 The DPF System in the Affected Vehicles comprises the following key physical components:

(a) the engine, the operation of which generates heated exhaust;

(b) the Engine Gas Recirculation (**EGR**) pipe, which sits upstream of the turbocharger (described in paragraph 9(c) below) and diverts some of the exhaust emitted from the engine back to the engine combustion chamber;

(c) the turbocharger, which receives heated exhaust exiting the engine through the engine turbo inlet, powering a turbine in the turbocharger, before this turbocharged exhaust exits the turbocharger through the engine turbo outlet;

(d) the diesel oxidation catalyst (**DOC**);

Particulars

(i) The DOC:

(A) comprises a honeycomb flow-through monolith substrate with a catalyst coating containing precious metals, including platinum and palladium;

(B) is designed to decrease the level of carbon monoxide and hydrocarbons in the exhaust by facilitating the oxidation of those substances, which converts those substances to carbon dioxide and water vapour, before the exhaust is released into the atmosphere; and

(C) is designed to facilitate "regeneration" of the diesel particulate filter (**DPF**) (as pleaded in paragraphs 15 to 34 below) by:

(1) facilitating catalytic conversion of NO in the exhaust to NO_2; and

(2) facilitating the catalytic conversion of hydrocarbons into carbon dioxide and water vapour, which reaction generates heat.

(ii) Further particulars may be provided following discovery and expert evidence.

(e) the DPF;

Particulars

(i) The DPF:

(A) comprises a porous monolith wall-flow filter;

(B) is designed to decrease the level of particulate matter in the exhaust emitted by capturing and storing particulate matter in the exhaust before the exhaust is released into the atmosphere; and

(C) is designed to facilitate the oxidation of particulate matter that is captured and stored in the DPF through the process of regeneration.

(ii) Further particulars may be provided following discovery and expert evidence.

(f) Selective Catalytic Reduction (**SCR**) catalysts, which are designed to decrease the level of NO_x in the exhaust emitted from the Affected Vehicles by reacting with an aqueous solution of urea (**Diesel Emissions Fluid**) introduced into the exhaust upstream of the SCR catalysts, which reaction results in the production of ammonia, which ammonia then reacts with NO_x in the exhaust to convert the NO_x into nitrogen and water;

Particulars

(i) In Affected Vehicles having a 2.0L 'Ingenium' engine (engine code AJ20-D4H or AJ20-D4M) and a D8 or PTA vehicle platform, the SCR catalysts are incorporated into the DPF, in what is known as a Selective Catalytic Reduction Filter (**SCRF**).

(ii) Affected Vehicles having a 2.0L 'Ingenium' engine (engine code AJ21-D4M) and a PTA or D7a vehicle platform also employ a SCRF in which the SCR catalysts are incorporated into the DPF.

(iii) In Affected Vehicles having a 2.0L 'Ingenium' engine (engine code AJ20-D4H or AJ20-D4M), 3.0L 'Ingenium' engine (engine code AJ20-D6H),

3.0L 'Ford V6' engine (engine code TDV6) or 4.4L 'Ford V8' engine (engine code TDV8) and a D7u, D7a or MLA vehicle platform, the SCR catalysts are housed separately from the DPF, downstream of the DPF.

(g) the Diesel Emissions Fluid injector, which injects Diesel Emissions Fluid into the exhaust upstream of the SCR catalysts; and

(h) the exhaust pipe, from which exhaust is emitted from the vehicle into the atmosphere.

Particulars

(i) The following diagram is representative of the basic design of the DPF System in the Affected Vehicles which employ a SCRF:

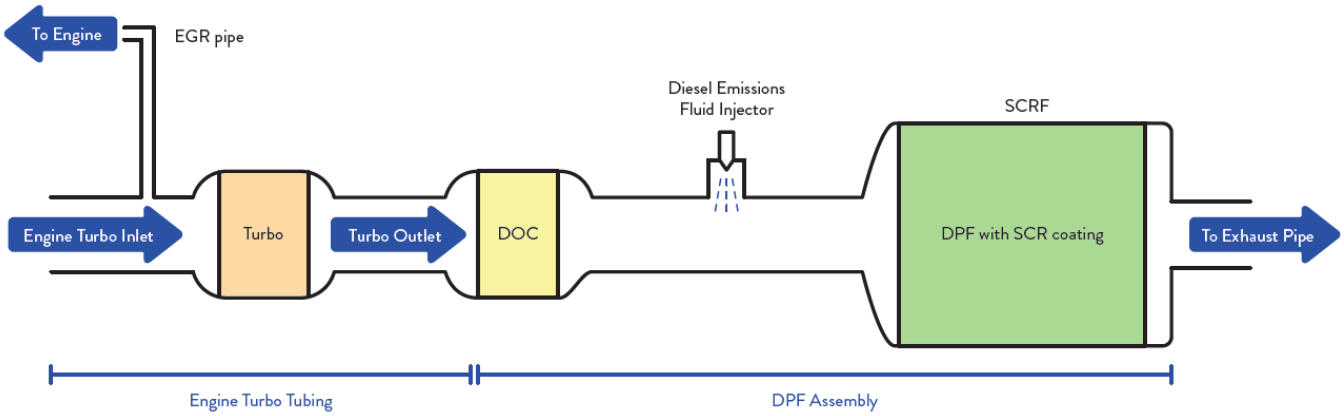

(ii) The following diagram is representative of the basic design of the DPF System in the Affected Vehicles which do not employ a SCRF:

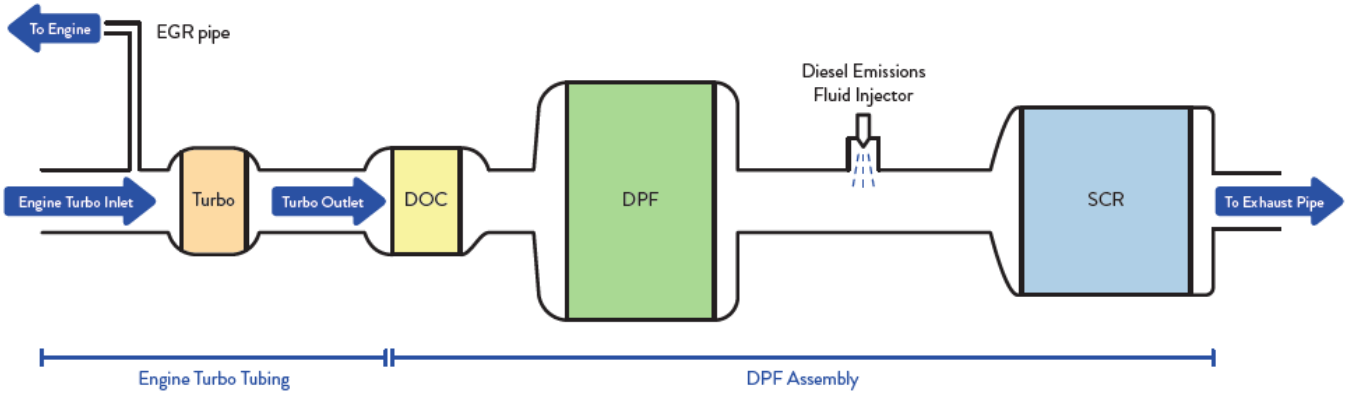

B.3 Other features of the DPF System

10 The DPF System in the Affected Vehicles employs the following techniques to suppress the level of NO_x generated by the operation of the engine and emitted by the Affected Vehicle:

(a) injection timing, whereby the injection of diesel fuel into the engine cylinder is slightly delayed;

Particulars

The delayed injection timing employed by the DPF System in the Affected Vehicles for the purpose of reducing NO_x emissions is different from the process of Delayed Fuel Injection employed by the Affected Vehicles for the purpose of facilitating Active Regeneration (as described in paragraphs 26 to 34 below).

(b) SCR, whereby the SCR catalysts react with the Diesel Emissions Fluid introduced into the exhaust upstream of the SCR catalysts, which reaction results in the production of ammonia, which ammonia then reacts with NO_x in the exhaust to convert the NO_x into nitrogen and water, which decreases the level of NO_x present in the exhaust; and

(c) EGR, whereby some of the exhaust exiting the engine is diverted back to the engine combustion chamber,

(**NO_x Emissions Reduction Techniques**).

11 In the Affected Vehicles, the NO_x Emissions Reduction Techniques have the effect of:

(a) decreasing the level of NO_x generated by the operation of the engine;

(b) increasing the level of particulate matter generated by the operation of the engine;

(c) decreasing the ratio of NO_x to particulate matter in the exhaust generated by the operation of the engine; and

(d) decreasing the temperature of the exhaust generated by the engine.

B.4 Accumulation of particulate matter in the DPF

12 The DPFs in the Affected Vehicles have a finite capacity for capture and storage of particulate matter.

13 As the level of accumulated particulate matter in the DPF increases, the DPF may become partially or completely blocked, or full.

14 When the DPF becomes partially or completely blocked, or is approaching or becomes full, the Affected Vehicles suffer adverse consequences.

Particulars

The applicants repeat the matters pleaded in paragraph 36 below.

B.5 Regeneration

15 In order to prevent the DPF from becoming partially or completely blocked, or full, with particulate matter, the particulate matter that has been captured and stored in the DPF must be removed.

16 In the Affected Vehicles, particulate matter that has been captured and stored in the DPF is removed by a process known as "regeneration".

17 The regeneration of the DPF is a critical function of the DPF System.

18 In regeneration, the removal of particulate matter from the DPF is effected by projecting exhaust through the DPF to achieve a chemical reaction known as “oxidation”. When particulate matter that has been captured and stored in the DPF oxidises, it is converted into carbon dioxide, which is then emitted from the vehicle through the exhaust pipe and into the atmosphere.

19 In light duty diesel vehicles generally, regeneration may occur in one of two ways, those being:

(a) without intervention of the vehicle’s Engine Control Module (**ECM**) (**Passive Regeneration**); or

(b) with intervention of the ECM (**Active Regeneration**).

Particulars

The applicants refer to paragraphs 20 to 34 below.

B.5.1 Passive Regeneration

20 In Passive Regeneration, the oxidation of particulate matter is achieved by reacting particulate matter with NO_2 (**NO_2 Oxidation**).

21 Passive Regeneration is effected as follows:

(a) the exhaust generated by the operation of the engine exits the engine and flows into the DOC;

(b) as the exhaust flows through the DOC, precious metals in the catalyst coating of the DOC cause a chemical reaction between NO and oxygen which produces NO_2;

(c) the exhaust (including the NO_2 produced in the DOC) then flows from the DOC into the DPF;

(d) as the exhaust (including the NO_2 produced in the DOC) flows through the DPF, NO_2 Oxidation of particulate matter captured and stored in the DPF occurs; and

(e) NO_2 Oxidation converts particulate matter into carbon dioxide and nitrogen, which is then emitted from the DPF through the exhaust pipe and into the atmosphere.

22 In order for Passive Regeneration to occur:

(a) there must be a sufficient amount of NO_x in the exhaust that is generated by the operation of the engine; and

(b) the temperature of the exhaust that is generated by the operation of the engine must reach a sufficiently high level.

Particulars

In respect of light duty diesel vehicles generally, the optimal exhaust temperature for NO_2 Oxidation is between 270°C and 350°C.

23 In the Affected Vehicles, the NO_x Emissions Reduction Techniques inhibit Passive Regeneration.

Particulars

The applicants refer to and repeat the matters pleaded in paragraph 11 above.

24 By reason of the matter pleaded in paragraph 23, in the Affected Vehicles, the conditions necessary for Passive Regeneration to occur, as pleaded in paragraph 22 above, are difficult to achieve.

25 By reason of the matter pleaded in paragraph 24:

(a) Passive Regeneration in the Affected Vehicles is insufficient to prevent the DPF from becoming partially or completely blocked, or full, with particulate matter; and

(b) the Affected Vehicles are dependent upon Active Regeneration to regenerate the DPF.

B.5.2 Active Regeneration

26 Active Regeneration is necessary when Passive Regeneration is insufficient to prevent the DPF from becoming partially or completely blocked, or full, with particulate matter.

27 In Active Regeneration, the oxidation of particulate matter is achieved by reacting particulate matter with oxygen (**Thermal Oxidation**).

28 In order for Thermal Oxidation to occur, the exhaust projected through the DPF must reach a sufficiently high temperature.

Particulars

In respect of light duty diesel vehicles generally, the optimal exhaust temperature for Thermal Oxidation is at least 550-600°C.

29 Active Regeneration is initiated upon the intervention of the ECM, where:

(a) the engine is operating; and

(b) the ECM determines that Active Regeneration is necessary, by reference to the level of particulate matter in, or likely to be in, the DPF.

Particulars

(i) In light duty diesel vehicles generally, the ECM may employ a range of different methods to determine the level of particulate matter in, or likely to be in, the DPF, including:

(A) relying upon pressure sensors in the DPF; and

(B) employing algorithms and models based upon time or distance travelled since the last instance of Active Regeneration.

(ii) The applicants presently do not know the manner in which the ECM in the Affected Vehicles determines the level of particulate matter in, or likely to be in, the DPF.

(iii) Further particulars may be provided following discovery and expert evidence.

30 Active Regeneration, once initiated upon the intervention of the ECM, is effected as follows:

(a) the ECM causes temporary changes in the engine settings to increase the temperature of the exhaust generated by the operation of the engine;

(b) the ECM causes additional diesel fuel to be injected into the engine cylinder late in the combustion cycle, as the piston is travelling downwards, resulting in a mixture of exhaust and vaporised fuel in the engine cylinder (**Delayed Fuel Injection**);

(c) the exhaust/fuel mixture resulting from the Delayed Fuel Injection then flows from the engine into the DOC;

(d) as the exhaust/fuel mixture flows through the DOC, precious metals in the catalyst coating of the DOC cause a chemical reaction between the fuel in the exhaust/fuel mixture and oxygen, which produces heat;

(e) the heated exhaust/fuel mixture then flows from the DOC into the DPF;

(f) as the heated exhaust/fuel mixture flows through the DPF, Thermal Oxidation of the particulate matter captured and stored in the DPF occurs; and

(g) Thermal Oxidation converts particulate matter into carbon dioxide, which is then emitted from the DPF through the exhaust pipe and into the atmosphere.

31 Active Regeneration, including in the Affected Vehicles, causes:

(a) the dilution of engine oil with diesel fuel (**Oil Dilution**);

Particulars

(i) In the Affected Vehicles, when Delayed Fuel Injection occurs, some of the injected diesel fuel fails to vaporise and/or condenses on the cylinder

walls, which diesel fuel then washes into the crankcase below, where it dilutes the lubricating engine oil present in the engine cylinders.

(ii) Further particulars may be provided following discovery and expert evidence.

(b) either by itself, or in combination with the use of EGR in the Affected Vehicles, contamination of the engine oil with particulate matter; and

Particulars

(i) In the Affected Vehicles, the injection of additional diesel fuel into the engine combustion chamber during Delayed Fuel Injection causes the engine to produce more particulate matter, some of which washes into the crankcase below and becomes suspended in the engine oil, a process which is exacerbated by the use of EGR in the Affected Vehicles, which involves diverting exhaust exiting the engine, including the particulate matter contained in the exhaust, back to the engine combustion chamber whereby the process described above occurs again.

(ii) Further particulars may be provided following discovery and expert evidence.

(c) an increase in fuel consumption during the period in which Active Regeneration is occurring (**Fuel Increase**).

Particulars

(i) The increase in fuel consumption in the Affected Vehicles during Active Regeneration is primarily the result of the injection of additional diesel fuel into the engine cylinders late in the combustion cycle (i.e. Delayed Fuel Injection), as pleaded in paragraph 30(b) above.

(ii) Further particulars may be provided following discovery and expert evidence.

32 Once initiated, Active Regeneration continues until:

(a) the DPF has been regenerated, as determined by the ECM; or

(b) the engine ceases to operate, as where the vehicle is switched off during Active Regeneration.

33 The rate at which oxidation of particulate matter that is captured and stored in the DPF occurs during Active Regeneration, and thus the duration of Active Regeneration once initiated, is dependent upon the temperature of the exhaust in the DPF.

34 In the Affected Vehicles, in order for Active Regeneration to regenerate the DPF, the temperature of the exhaust passing through the DPF must be maintained at at least 550°C for a continuous period of approximately 20 minutes.

C. THE VEHICLE DEFECTS

35 The DPF System in the Affected Vehicles, by reason of its design, is not effective at regenerating the DPF.

Particulars

(i) The design of the DPF System is described above in paragraphs 5 to 34.

(ii) The DPF System in the Affected Vehicles is not effective at regenerating the DPF, because:

(A) the conditions necessary for Passive Regeneration to occur are difficult to achieve, such that the Affected Vehicles are dependent upon Active Regeneration to regenerate the DPF (see above paragraphs 22 to 25); and

(B) Active Regeneration in the Affected Vehicles is not effective at regenerating the DPF.

(iii) Further particulars may be provided following discovery and expert evidence.

36 By reason of the design of the DPF System in the Affected Vehicles, the Affected Vehicles have a propensity to experience one or more of the following problems:

(a) excessive Oil Dilution;

Particulars

(i) Excessive Oil Dilution occurs as a result of:

(A) the Affected Vehicles' dependence on Active Regeneration to regenerate the DPF (see above paragraphs 22 to 25);

(B) Active Regeneration in the Affected Vehicles causing Oil Dilution (see above paragraph 31(a));

(C) an excessive amount of additional diesel fuel needing to be injected during Delayed Fuel Injection in order to achieve the temperature necessary to cause Thermal Oxidation to occur during Active Regeneration in the Affected Vehicles; and

(D) the fact that the DPF System in the Affected Vehicles is not effective at regenerating the DPF (see above paragraph 35), which in turn causes the Affected Vehicles to require and experience more Active Regeneration, and therefore more Oil Dilution.

(ii) The Affected Vehicles have a propensity to experience Oil Dilution that is excessive in the sense that:

(A) the engine oil needs to be changed outside of regular service intervals, due to Oil Dilution;

(B) the viscosity of the engine oil is reduced by more than 25% before the regular service interval has expired; and/or

(C) the amount of diesel fuel in the engine oil reaches or exceeds 6% before the regular service interval has expired.

(iii) A regular service interval is the interval (as measured by the passage of time or the accumulation of kilometres driven) after which JLR recommends that the vehicle be serviced.

(iv) Further particulars may be provided following discovery and expert evidence.

(b) degradation of the engine components and the DPF System (**Wear and Tear**);

Particulars

(i) The Wear and Tear occurs as a result of:

(A) excessive Oil Dilution, which reduces the viscosity and thereby the lubricating properties, of the engine oil, which in turn results in

greater friction between the moving parts of the engine in the cylinders, including the pistons, piston rings, cranks and crankshafts, leading to greater wear and tear on those parts;

(B) excessive Oil Contamination (as described in paragraph 36(c) below), in that the particulate matter and metal shavings in the engine oil act as abrasives and wear down or damage the engine components;

(C) exposure of the engine components and DPF System to the high exhaust temperatures caused by, and necessary for, Active Regeneration;

(D) the Affected Vehicles' dependence on Active Regeneration to regenerate the DPF (see above paragraphs 22 to 25); and

(E) the fact that the DPF System in the Affected Vehicles is not effective at regenerating the DPF (see above paragraph 35), which in turn causes the Affected Vehicles to require and experience more Active Regeneration, and therefore more Wear and Tear.

(ii) Further particulars may be provided following discovery and expert evidence.

(c) excessive contamination of the engine oil with particulate matter and metal shavings (**Oil Contamination**);

Particulars

(i) Excessive Oil Contamination occurs as a result of:

(A) the Wear and Tear described above in paragraph 36(b), which causes small shavings of metal to dislodge from the engine components and become suspended in the engine oil;

(B) the Affected Vehicles' dependence on Active Regeneration to regenerate the DPF (see above paragraphs 22 to 25);

(C) Active Regeneration in the Affected Vehicles, either by itself or in combination with the use of EGR in the vehicles, causing contamination of the engine oil with particulate matter (see above paragraph 31(b));

(D) an excessive amount of additional diesel fuel needing to be injected during Delayed Fuel Injection in order to achieve the temperature necessary to cause Thermal Oxidation to occur during Active Regeneration in the Affected Vehicles; and

(E) the fact that the DPF System in the Affected Vehicles is not effective at regenerating the DPF (see above paragraph 35), which in turn causes the Affected Vehicles to require and experience more Active Regeneration, and therefore more Oil Contamination.

(ii) The Affected Vehicles have a propensity to experience Oil Contamination that is excessive in the sense that:

(A) the engine oil needs to be changed outside of regular service intervals, due to Oil Contamination;

(B) the level of iron in the engine oil reaches or exceeds 95mg/kg before the regular service interval has expired;

(C) the level of aluminium in the engine oil reaches or exceeds 15mg/kg before the regular service interval has expired;

(D) the level of copper in the engine oil reaches or exceeds 30mg/kg before the regular service interval has expired; and/or

(E) the level of particulate matter in the engine oil reaches or exceeds 70abs/cm before the regular service interval has expired.

(iii) Further particulars may be provided following discovery and expert evidence.

(d) the formation of deposits comprising a mixture of particulate matter and fuel on the face of the DOC (**DOC Face Plugging**), which results in diminished catalytic efficiency of the DOC and causes the DOC to cease to function effectively and/or require replacement;

Particulars

(i) DOC Face Plugging occurs as a result of:

(A) the Affected Vehicles' dependence on Active Regeneration to regenerate the DPF (see above paragraphs 22 to 25);

(B) an excessive amount of additional diesel fuel needing to be injected during Delayed Fuel Injection in order to achieve the temperature necessary to cause Thermal Oxidation to occur during Active Regeneration in the Affected Vehicles;

(C) the additional diesel fuel injected during Delayed Fuel Injection failing to aerosolise sufficiently to prevent deposits comprising a mixture of particulate matter and diesel fuel to form on the face of the DOC;

(D) the temperature of the exhaust/fuel mixture passing through the DOC not being sufficiently high to prevent deposits comprising a mixture of particulate matter and diesel fuel to form on the face of the DOC; and

(E) the fact that the DPF System in the Affected Vehicles is not effective at regenerating the DPF (see above paragraph 35), which in turn causes the Affected Vehicles to require and experience more Active Regeneration, and therefore more DOC Face Plugging.

(ii) Further particulars may be provided following discovery and expert evidence.

(e) increased fuel consumption;

Particulars

(i) Increased fuel consumption occurs as a result of:

(A) the Affected Vehicles' dependence upon Active Regeneration to regenerate the DPF (see above paragraphs 22 to 25);

(B) the Fuel Increase associated with Active Regeneration in the Affected Vehicles (see above paragraph 31(c));

(C) an excessive amount of additional diesel fuel needing to be injected during Delayed Fuel Injection in order to achieve the temperature necessary to cause Thermal Oxidation to occur during Active Regeneration in the Affected Vehicles; and

(D) the fact that the DPF System in the Affected Vehicles is not effective at regenerating the DPF (see above paragraph 35), which in turn causes the Affected Vehicles to require and experience more Active Regeneration, and therefore to experience the Fuel Increase more often.

(ii) Further particulars may be provided following discovery and expert evidence.

(f) engine failure, as a result of excessive Oil Dilution;

(g) the DOC becomes blocked, resulting in the DOC ceasing to function effectively and/or requiring replacement;

Particulars

(i) The DOC becomes blocked as a result of:

(A) DOC Face Plugging (see above paragraph 36(d));

(B) the Affected Vehicles' dependence on Active Regeneration to regenerate the DPF (see above paragraphs 22 to 25);

(C) an excessive amount of additional diesel fuel needing to be injected during Delayed Fuel Injection in order to achieve the temperature necessary to cause Thermal Oxidation to occur during Active Regeneration in the Affected Vehicles;

(D) the additional diesel fuel injected during Delayed Fuel Injection failing to aerosolise sufficiently to prevent deposits comprising a mixture of particulate matter and diesel fuel to form in the DOC;

(E) the temperature of the exhaust/fuel mixture passing through the DOC not being sufficiently high to prevent deposits comprising a mixture of particulate matter and diesel fuel to form in the DOC; and

(F) the fact that the DPF System in the Affected Vehicles is not effective at regenerating the DPF (see above paragraph 35), which in turn causes the Affected Vehicles to require and experience more Active Regeneration, and therefore more blockage of DOC.

(ii) By reason of the DOC becoming blocked, Active Regeneration is required more frequently and/or for longer durations, exacerbating and/or contributing to the matters pleaded above in paragraphs 36(a) to 36(g).

(iii) Further particulars may be provided following discovery and expert evidence.

(h) the DPF becomes blocked, resulting in the DPF ceasing to function effectively and/or requiring replacement;

Particulars

(i) The DPF becomes blocked as a result of:

(A) the fact that the DPF System in the Affected Vehicles is not effective at regenerating the DPF (see above paragraph 35);

(B) DOC Face Plugging (see above paragraph 36(d));

(C) the Affected Vehicles' dependence on Active Regeneration to regenerate the DPF (see above paragraphs 22 to 25);

(D) an excessive amount of additional diesel fuel needing to be injected during Delayed Fuel Injection in order to achieve the temperature necessary to cause Thermal Oxidation to occur during Active Regeneration in the Affected Vehicles;

(E) the additional diesel fuel injected during Delayed Fuel Injection failing to aerosolise sufficiently to prevent deposits comprising a mixture of particulate matter and diesel fuel to form in the DPF; and

(F) the temperature of the exhaust/fuel mixture passing through the DPF not being sufficiently high to prevent deposits comprising a mixture of particulate matter and diesel fuel to form in the DPF.

(ii) By reason of the DPF becoming blocked, Active Regeneration is required more frequently and/or for longer durations, exacerbating and/or contributing to the matters pleaded above in paragraphs 36(a) to 36(h).

(iii) Further particulars may be provided following discovery and expert evidence.

(i) the DPF becomes damaged, resulting in the DPF ceasing to function effectively and/or requiring replacement;

Particulars

(i) The DPF becomes damaged as a result of the DPF becoming blocked (see above paragraph 36(h)).

(ii) Further particulars may be provided following discovery and expert evidence.

(j) diminished vehicle performance, as a result of the matters pleaded in paragraphs 36(g) to 36(i) above;

Particulars

When the DPF becomes blocked or damaged, the backpressure on the engine increases, which negatively affects engine performance.

(k) the vehicle enters into limp-home mode, including whilst the Affected Vehicle is being driven and without warning;

Particulars

"Limp-home mode" is a term used by JLRA and JLR UK to describe a mode of restricted operation that may be initiated automatically by the Affected Vehicle in the event of transmission system faults. Limp-home mode may be initiated while the Affected Vehicle is being driven and without warning that the vehicle is about to enter into limp-home mode (other than, in some cases, a red or amber DPF warning light, as described in paragraph 36(n) below). In limp-home mode, only limited gears are available for use, and in some circumstances, the gear selector may be locked in position until the ignition is switched off. The owner's manuals for the Affected Vehicles state that, when the vehicle enters into limp-home mode, the vehicle should be carefully driven to the nearest place of safety, and qualified assistance should be sought.

(l) the Affected Vehicle must be inspected, serviced and/or repaired by a service engineer for the purpose of cleaning, repairing or replacing the DPF or the DPF System (or components thereof);

(m) the Affected Vehicle must be inspected, serviced and/or repaired by a service engineer outside of regular service intervals; and

(n) one or more warning lights on the dashboard of the Affected Vehicle:

(i) are illuminated on an excessive number of occasions and/or for an excessive period of time; or

(ii) are not illuminated in circumstances where they ought to be illuminated.

Particulars

(i) An amber DPF warning light indicates that the DPF has failed to regenerate and is starting to become full.

(ii) A red DPF warning light indicates that the DPF is full, or that there is a fault with the DPF System. In the event that a red DPF warning light is illuminated, the owner's manuals for the Affected Vehicles direct the owner to contact their local Dealer or an authorised repairer as soon as possible.

(iii) In some cases, the amber DPF warning light does not reliably illuminate prior to the DPF becoming full, or illuminate within a sufficient amount of time prior to the DPF becoming full to allow a regeneration of the DPF to occur.

37 The matters described in paragraphs 35 and 36 are referred to in this Statement of Claim together as the **Vehicle Defects.**

38 The Vehicle Defects were present in each Affected Vehicle that was supplied in the circumstances described above in paragraph 1(b)(i), at the time that the Affected Vehicle was supplied.

39 By reason of the matters described in paragraphs 35 and 36, individually and cumulatively, and paragraph 38, the Affected Vehicles were defective at the time they were supplied in the circumstances described above in paragraph 1(b)(i).

40 The Vehicle Defects in the Affected Vehicles have not been remedied, such that the Vehicle Defects remain present in each Affected Vehicle.

D. THE APPLICANTS' AFFECTED VEHICLES

41 The Vehicle Defects were present in the Applicants' Affected Vehicles at the time they were supplied to the respective applicants.

42 On multiple occasions during the Relevant Period:

(a) the Applicants' Affected Vehicles have experienced problems arising from the Vehicle Defects;

(b) the applicants have respectively complained to a Dealer about problems with the Applicants' Affected Vehicles arising from the Vehicle Defects; and

(c) the Applicants' Affected Vehicles have been inspected and serviced by a Dealer for the purpose of attempting to address issues arising from the Vehicle Defects;

Particulars

The Greentree Affected Vehicle

(i) During the Relevant Period, the Greentree Affected Vehicle was serviced by Port Macquarie Land Rover on at least the following 5 occasions for the purpose of attempting to address issues arising from the Vehicle Defects:

(A) on or about 4 May 2018, when the Greentree Affected Vehicle was towed to Port Macquarie Land Rover service centre after the red DPF warning light and a message stating "*Contact Dealer*" activated on the dashboard of the Greentree Affected Vehicle and the vehicle entered limp-home mode, during which service:

(1) the DPF in the Greentree Affected Vehicle was replaced;

(2) the oil dilution counter was reset and the powertrain control module was updated in the Greentree Affected Vehicle; and

(3) the oil in the Greentree Affected Vehicle was changed outside of the regular service interval for the Greentree Affected Vehicle;

(B) on or about 15 January 2020, when the Greentree Affected Vehicle was towed to Port Macquarie Land Rover service centre after the red DPF warning light and a message stating "*DPF full, visit dealer*" activated on the dashboard of the Greentree Affected Vehicle and the vehicle entered limp-home mode, during which service:

(1) the DPF in the Greentree Affected Vehicle was replaced; and

(2) the oil in the Greentree Affected Vehicle was changed outside of the regular service interval for the Greentree Affected Vehicle;

(C) on or about 2 October 2020, after a warning message stating "*Service Required*" activated on the dashboard of the Greentree Affected Vehicle, during which service the oil in the Greentree Affected Vehicle was changed outside of the regular service interval for the Greentree Affected Vehicle;

(D) on or about 14 July 2021, when the Greentree Affected Vehicle was towed to Port Macquarie Land Rover service centre after the red DPF warning light activated on the dashboard of the Greentree Affected Vehicle and the vehicle entered limp-home mode, during which service:

(1) the DPF in the Greentree Affected Vehicle was replaced; and

(2) the EGR cooler filter in the Greentree Affected Vehicle was replaced;

(E) On or about 21 February 2022, when the Greentree Affected Vehicle was towed to Port Macquarie Land Rover service centre after the red DPF warning light activated on the dashboard of the Greentree Affected Vehicle and the vehicle entered limp-home mode, during which service:

(1) a forced regeneration of the DPF in the Greentree Affected Vehicle was carried out; and

(2) the oil in the Greentree Affected Vehicle was changed outside of the regular service interval for the Greentree Affected Vehicle.

(ii) In total, the services performed on the Greentree Affected Vehicle for the purpose of attempting to address issues arising from the Vehicle Defects during the Relevant Period have included 3 DPF replacements, 1 forced regeneration of the DPF, replacement of the EGR cooler filter, and 4 oil changes outside of the vehicle's regular service interval.

(iii) During the Relevant Period:

(A) the red DPF warning light has activated on the dash of the Greentree Affected Vehicle 4 times;

(B) the Greentree Affected Vehicle has entered limp-home mode 4 times; and

(C) the Greentree Affected Vehicle has needed to be towed to Port Macquarie Land Rover service centre for servicing to attempt to address issues arising from the Vehicle Defects 4 times.

(iv) The first and second applicants raised the Vehicle Defects with Port Macquarie Land Rover on at least 10 occasions during the Relevant Period, including:

(A) when providing the Greentree Affected Vehicle for service on the above dates; and

(B) via written complaints to Port Macquarie Land Rover on 23 January 2020, 5 September 2020, 22 June 2021, 29 June 2021 and 21 February 2022.

The Jennings Affected Vehicle

(v) In around October 2021, the Jennings Affected Vehicle displayed an amber warning light on the dashboard and was returned to Rockhampton Jaguar Land Rover (an authorised dealer) for a service. The service identified that the Jennings Affected Vehicle was experiencing DPF blockage and contained 29 grams of soot. This was reduced to 4.2 grams by carrying out a "DPF burn sitting at 100km (sic)

for 30 minutes". Following the service, the third applicant was advised by Kate Marshall of Rockhampton Jaguar Land Rover that to clear DPF blockages she needed to drive the Jennings Affected Vehicle to the beach every weekend.

(vi) On around 6 November 2021, the third applicant drove the Jennings Affected Vehicle from Rockhampton to Yeppoon (a drive of approximately 40 km) to regenerate the DPF system as instructed. During the drive, the Jennings Affected Vehicle displayed a further warning light which suddenly reduced the speed of the car. This created a dangerous situation as the third applicant was driving on a single lane highway with a car behind her.

(vii) On around 15 November 2021, the third applicant returned the Jennings Affected Vehicle to Rockhampton Jaguar Land Rover for a service. She was advised that the DPF filter had to be replaced. The Jennings Affected Vehicle was held by Rockhampton Jaguar Land Rover until around 23 December 2021 while the repairs were carried out.

(viii) On around 25 July 2022, the Jennings Affected Vehicle displayed a further warning light and was returned for servicing at Rockhampton Jaguar Land Rover. The service identified that "DTC P2002-92-Particulate filter efficiency low" and the DPF was replaced again, "due to internal failure".

(ix) In around October 2022, the third applicant sold the Jennings Affected Vehicle for $62,500 to a used car dealer.

(x) Further particulars may be provided following discovery and/or evidence.

43 Notwithstanding the matters pleaded in paragraph 42 above:

(a) the Vehicle Defects in the Greentree Affected Vehicle have not been remedied, such that the Vehicle Defects remain present in the Greentree Affected Vehicle; and

(b) the Vehicle Defects in the Jennings Affected Vehicle were not remedied, such that the Vehicle Defects remained present in the Jennings Affected Vehicle at the time it was sold by the third applicant.

E. JLRA'S AND JLR UK'S REPRESENTATIONS

44 Throughout the Relevant Period~~, JLR~~:

(a) JLRA and JLR UK advertised and marketed the Affected Vehicles in Australia; and

(b) JLRA distributed the Affected Vehicles in Australia to authorised Dealers.

E.1 Vehicle Representations

45 Throughout the Relevant Period, JLRA and JLR UK each represented that the Affected Vehicles:

(a) were, or were part of model lines that were, in their design and manufacturing:

(i) not defective;

(ii) of good quality;

(iii) safe;

(iv) reliable;

(v) durable;

(vi) fit for purpose; and

(vii) suitable for use in any driving environment, including urban, extra-urban and off-road driving environments;

(b) did not, or were part of model lines that did not, require unusual or abnormal maintenance; and/or

Particulars

Unusual or abnormal maintenance includes servicing outside of regular service intervals.

(c) provided, or were part of model lines that provided, a driving and/or passenger experience that was consistent regardless of driving environment, including urban, extra-urban and off-road driving environments,

(together, the **Vehicle Representations**).

Particulars

(i) The Vehicle Representations were express or implied.

(ii) The applicants refer to:

(A) Land Rover Discovery Sport E-Brochures published 2016, 2017 and 2018;

(B) Land Rover Discovery Sport Specification and Price Guides published 2017 and 2018;

(C) Range Rover Evoque E-Brochures published 2016, 2017 and 2018;

(D) Jaguar E-PACE E-Brochures published 2018 and 2019;

(E) Land Rover Discovery E-Brochures published 2016, 2017 and 2018;

(F) Land Rover Discovery Specification and Price Guide published 2018;

(G) Range Rover E-Brochures published 2016, 2017 and 2018;

(H) Range Rover Specification and Price Guide published 2017;

(I) Range Rover Sport E-Brochures published 2017 and 2018;

(J) Jaguar F-Pace E-Brochure published 2018;

(K) Jaguar XE E-Brochure published 2018;

(L) Jaguar XF E-Brochure published 2018;

(M) Range Rover Velar E-Brochure published 2018;

(N) pages available on the Land Rover website www.landrover.com.au during the Relevant Period promoting the Land Rover Discovery Sport and featuring information about, describing features of, and displaying photographs of these vehicles;

(O) pages available on the Land Rover website www.landrover.com.au during the Relevant Period promoting the Range Rover Evoque

and featuring information about, describing features of, and displaying photographs of these vehicles; and

(P) pages available on the Jaguar website www.jaguar.com.au during the Relevant Period promoting the Jaguar E-Pace and featuring information about, describing features of, and displaying photographs of these vehicles;

(Q) pages available on the Land Rover website www.landrover.com.au during the Relevant Period promoting the Land Rover Discovery and featuring information about, describing features of, and displaying photographs of these vehicles;

(R) pages available on the Land Rover website www.landrover.com.au during the Relevant Period promoting the Range Rover and featuring information about, describing features of, and displaying photographs of these vehicles;

(S) pages available on the Land Rover website www.landrover.com.au during the Relevant Period promoting the Range Rover Sport and featuring information about, describing features of, and displaying photographs of these vehicles;

(T) pages available on the Land Rover website www.landrover.com.au during the Relevant Period promoting the Land Rover Defender and featuring information about, describing features of, and displaying photographs of these vehicles;

(U) pages available on the Jaguar website www.jaguar.com.au during the Relevant Period promoting the Jaguar F-Pace and featuring information about, describing features of, and displaying photographs of these vehicles;

(V) pages available on the Jaguar website www.jaguar.com.au during the Relevant Period promoting the Jaguar XE and featuring information about, describing features of, and displaying photographs of these vehicles;

(W) pages available on the Jaguar website www.jaguar.com.au during the Relevant Period promoting the Jaguar XF and featuring

information about, describing features of, and displaying photographs of these vehicles; and

(X) pages available on the Land Rover website www.landrover.com.au during the Relevant Period promoting the Range Rover Velar and featuring information about, describing features of, and displaying photographs of these vehicles.

(iii) Further particulars may be provided following discovery.

46 The Vehicle Representations were made to the public at large.

47 Each of the Vehicle Representations was a continuing representation.

48 JLRA and JLR UK each failed to correct, qualify or withdraw the Vehicle Representations at any time during the Relevant Period.

E.2 Future Vehicle Representations

49 Throughout the Relevant Period, JLRA and JLR UK each also represented that the Affected Vehicles:

(a) would be, or were part of model lines that would be:

(i) not defective;

(ii) of good quality;

(iii) safe;

(iv) reliable;

(v) durable;

(vi) fit for purpose; and

(vii) suitable for use in any driving environment, including urban, extra-urban and off-road driving environments;

(b) would not, or were part of model lines that would not, require unusual or abnormal maintenance; and/or

(c) would provide, or were part of model lines that would provide, a driving and/or passenger experience that was consistent regardless of driving environment, including urban, extra-urban and off-road driving environments,

(together, the **Future Vehicle Representations**).

Particulars

The applicants refer to and repeat the particulars to paragraph 45 above.

50 The Future Vehicle Representations were made to the public at large.

51 The Future Vehicle Representations were representations with respect to future matters, within the meaning of section 4 of the ACL.

52 Each of the Future Vehicle Representations was a continuing representation.

53 JLRA and JLR UK each failed to correct, qualify or withdraw the Future Vehicle Representations at any time during the Relevant Period.

F. JLRA'S AND JLR UK'S OMISSIONS

54 Throughout the Relevant Period, neither JLRA nor JLR UK ~~did not~~ disclosed to prospective purchasers or persons acquiring an Affected Vehicle, or to the public at large, that the Vehicle Defects were present in the Affected Vehicles (the **Omissions Conduct**).

55 The Omissions Conduct continued from at least the start of the Relevant Period until at least the end of the Relevant Period.

G. FAILURE TO COMPLY WITH STATUTORY GUARANTEE AS TO ACCEPTABLE QUALITY

56 The Affected Vehicles were goods of a kind ordinarily acquired for personal, domestic or household use or consumption.

57 By reason of the matters pleaded in paragraphs 1, 3, and 56 above:

(a) the applicants are taken to have acquired the respective Applicants' Affected Vehicles as 'consumers' within the meaning of section 3 of the ACL; and

(b) persons who acquired Affected Vehicles in the circumstances pleaded in paragraph 1(b)(i) above are taken to have acquired those Affected Vehicles as 'consumers', within the meaning of section 3 of the ACL.

58 Affected Vehicles that were supplied in the circumstances pleaded in paragraph 1(b)(i) above were supplied in trade or commerce, within the meaning of section 2 of the ACL.

59 By reason of the matters pleaded in paragraphs 56 to 58 above, in respect of each Affected Vehicle supplied in the circumstances pleaded in paragraph 1(b)(i) above,

there was a guarantee that the Affected Vehicle was of acceptable quality, within the meaning of section 54 of the ACL.

60 The Applicants' Affected Vehicles were supplied in trade or commerce.

61 By reason of the matters pleaded in paragraphs 3, 3A, 56, 57, and 60 above, in respect of the Applicants' Affected Vehicles, there was a guarantee that the Applicants' Affected Vehicles were of acceptable quality, within the meaning of section 54 of the ACL.

62 By reason of the matters pleaded above in paragraphs 35 to 38, at the time that each Affected Vehicle was supplied in the circumstances pleaded above in paragraph 1(b)(i) (or, in the case of the Applicants' Affected Vehicles, the circumstances pleaded above in paragraphs 3 and 3A respectively), the Affected Vehicle, was not as:

(a) fit for all the purposes for which goods such as the Affected Vehicle are commonly supplied;

(b) free from defects;

(c) safe; or

(d) durable,

as a reasonable consumer fully acquainted with the state and condition of the goods (including the Vehicle Defects) would regard as acceptable having regard to:

(e) the nature of the Affected Vehicle;

(f) the price of the Affected Vehicle; and

(g) the representations and omissions pleaded in paragraphs 45 to 55 above.

63 By reason of the matters pleaded in paragraph 62, individually and cumulatively:

(a) each Affected Vehicle supplied in the circumstances pleaded above in paragraph 1(b)(i) was not of acceptable quality within the meaning of section 54 of the ACL at the time it was supplied; and

(b) the Applicants' Affected Vehicles were not of acceptable quality within the meaning of section 54 of the ACL at the time they were supplied.

H. MISLEADING OR DECEPTIVE CONDUCT

64 The following conduct was conduct engaged in by each of JLRA and JLR UK in trade or commerce:

(a) making, and failing to correct, qualify, or withdraw the Vehicle Representations;

(b) making, and failing to correct, qualify or withdraw the Future Vehicle Representations,

(together, the **Misleading Representations**), and

(c) the Omissions Conduct,

(together with the Misleading Representations, the **Misleading Conduct**).

65 At the time that each of JLRA and JLR UK made the Vehicle Representations, and throughout the Relevant Period, the Affected Vehicles:

(a) were not, or were part of model lines that were not, in their design and manufacturing:

(i) not defective;

(ii) of good quality;

(iii) safe;

(iv) reliable;

(v) durable;

(vi) fit for purpose; and/or

(vii) suitable for use any driving environment, including urban, extra-urban and off-road driving environments;

(b) were not convenient to own by reason of extended service intervals;

(c) required unusual or abnormal maintenance; and/or

(d) did not provide, or were part of model lines that did not provide, a driving and/or passenger experience that was consistent regardless of driving environment, including urban, extra-urban and off-road driving environments.

Particulars

The applicants refer to and repeat paragraphs 5 to 39 above and the particulars thereto.

66 At the time that each of JLRA and JLR UK made the Future Vehicle Representations, neither JLRA nor JLR UK had ~~did not have~~ reasonable grounds for making the Future Vehicle Representations.

Particulars

(i) The applicants refer to and repeat paragraphs 5 to 39 and 45 above and the particulars thereto.

(ii) The applicants rely upon section 4 of the ACL.

(iii) Further particulars may be provided following discovery and expert evidence.

67 At the times that each of JLRA and JLR UK engaged in the Omissions Conduct:

(a) the information the subject of the Omissions Conduct was material to a reasonable consumer's decision whether to acquire an Affected Vehicle;

(b) it would reasonably be expected that JLRA or JLR UK (as applicable) would disclose the information the subject of the Omissions Conduct to the applicants and Group Members prior to their acquisition of an Affected Vehicle; and

(c) on and from July 2017, each of JLRA and JLR UK has known of the existence of the Vehicle Defects in the Affected Vehicles.

Particulars

(i) Since at least July 2017, JLRA, JLR UK and ~~its~~their respective Dealers have received complaints from consumers concerning the Vehicle Defects.

(ii) Service Compliance Notification JLRP00100 dated July 2017.

(iii) Further particulars may be provided following discovery and expert evidence.

68 The making of each of the Misleading Representations was:

(a) conduct in connection with the supply or possible supply of the Affected Vehicles and/or in connection with the promotion of the supply or use of the Affected Vehicles, within the meaning of subsection 29(1) of the ACL;

(b) the making of a representation that the Affected Vehicles were of a particular standard, quality, composition, and/or style, within the meaning of subsection 29(1)(a) of the ACL; and/or

(c) the making of a representation that the Affected Vehicles had performance characteristics or uses, within the meaning of subsection 29(1)(g) of the ACL.

69 By reason of the matters pleaded in paragraphs 64 to 68 above:

(a) the Misleading Conduct was, individually and cumulatively, conduct that was:

(i) misleading or deceptive, or likely to mislead or deceive, in contravention of section 18 of the ACL;

(ii) liable to mislead the public as to the nature, characteristics, and/or suitability for purpose of the Affected Vehicles, in contravention of section 33 of the ACL; and

(b) each of the Misleading Representations was a false or misleading representation, in contravention of subsections 29(1)(a) and/or 29(1)(g) of the ACL.

I. ~~LOSS OR DAMAGE SUFFERED BY THE~~ APPLICANTS' AND GROUP MEMBERS' ENTITLEMENTS TO DAMAGES

70 In respect of each Affected Vehicle supplied to the applicants and Group Members, the failure to comply with the statutory guarantee of acceptable quality as pleaded above in paragraph 63:

(a) resulted in a reduction in the value of the Affected Vehicle; and

(b) caused reasonably foreseeable loss or damage to the applicants or Group Members (as applicable) who acquired the Affected Vehicle.

Particulars

(i) As for the reduction in value, by reason of the failure to comply with the statutory guarantee of acceptable quality, the applicants and at least some Group Members ~~each~~ overpaid for their Affected Vehicles, in that

they acquired their Affected Vehicles for more than the Affected Vehicles were worth.

(ii) Further particulars as to the quantum of the reduction in the value of each Affected Vehicle resulting from the failure to comply with the statutory guarantee of acceptable quality will be provided following discovery and expert evidence.

(iii) As for reasonably foreseeable loss and damage, by reason of the failure to comply with the statutory guarantee of acceptable quality:

(A) the applicants and at least some Group Members paid more GST than they ought to have paid in relation to their acquisition of an Affected Vehicle (as a consequence of having overpaid for the Affected Vehicles);

(B) the applicants and at least some Group Members paid more stamp duty than they ought to have paid in relation to their acquisition of an Affected Vehicle (as a consequence of having overpaid for the Affected Vehicles);

(C) the third applicant and at least some Group Members paid more luxury car tax than they ought to have paid in relation to their acquisition of an Affected Vehicle (as a consequence of having overpaid for the Affected Vehicles);

(D) the third applicant and at least some Group Members paid more financing costs than they ought to have paid in relation to their acquisition of an Affected Vehicle (as a consequence of having overpaid for the Affected Vehicles);

(E) at least some Group Members have been required to have their Affected Vehicle inspected, serviced and/or repaired, or components in their Affected Vehicle replaced, by a service engineer or qualified professional, at their own cost;

(F) the first and second applicants and at least some Group Members have not been able to work at the times that their Affected Vehicle was being inspected, serviced and/or repaired, causing them to lose income;

(G) the applicants and Group Members have been required to purchase fuel for the Affected Vehicles in excess of that which the Affected Vehicles would have consumed, but for their failure to comply with the guarantee as to acceptable quality; and

(H) the applicants and at least some Group Members have suffered loss of amenity, vexation, distress and disappointment.

71 But for the Misleading Conduct, individually and cumulatively, the applicants and each Group Member who acquired an Affected Vehicle either:

(a) would not have acquired the Affected Vehicle(s) they acquired; or

(b) in the alternative to paragraph 71(a), would have acquired the Affected Vehicle(s) for a price that was lower than the price(s) for which they in fact acquired the Affected Vehicle(s).

Particulars

(i) But for the Misleading Conduct, individually and cumulatively, the Affected Vehicle(s) would not have been offered for acquisition, or alternatively, if they were offered for acquisition, would not have been acquired by the applicants or Group Members.

(ii) In the event that the Affected Vehicle(s) were offered for acquisition, the price for which the Affected Vehicle(s) would have been offered for acquisition would have been lower than the price for which they were in fact offered for acquisition, because the price would have reflected the reduction in the value of the Affected Vehicle(s) resulting from the presence of the Vehicle Defects in the Affected Vehicle(s).

72 The applicants and Group Members have suffered loss or damage as a result of the failure of the Affected Vehicles to comply with the statutory guarantee as to acceptable quality in section 54 of the ACL.

Particulars

(i) The particulars of loss or damage caused by the Affected Vehicles not complying with the statutory guarantee as to acceptable quality are set out in Schedule 1 of this Statement of Claim.

(ii) Further particulars of the extent to which the failure of the Affected Vehicles to comply with the statutory guarantee as to acceptable quality has caused the applicants and Group Members to suffer loss or damage may be provided following discovery and expert evidence.

73 Each Group Member is an 'affected person' within the meaning of subsection 271(1) of the ACL, in that each was:

(a) a consumer who acquired an Affected Vehicle; or

(b) a person who acquired an Affected Vehicle from, or derived title to an Affected Vehicle through or under, a consumer (other than for the purpose of re-supply).

Particulars

The applicants refer to paragraph 1(b) above.

74 Each of the applicants is an 'affected person' within the meaning of subsection 271(1) of the ACL, in that each of the first and second applicants was a consumer who acquired the Greentree Affected Vehicle, and the third applicant was a consumer who acquired the Jennings Affected Vehicle.

74A By reason of the matters pleaded in:

(a) paragraphs 70 and 74 above, the first and second applicants are entitled to recover damages for the reduction in the value of the Greentree Affected Vehicle pleaded in paragraph 70(a) above; and

(b) paragraphs 70 and 73 above, at least some Group Members are entitled to recover damages for the reduction in the value of the Affected Vehicle to which their claim relates pleaded in paragraph 70(a) above.

Particulars

(i) The first and second applicants are entitled to recover damages for the reduction in the value of the Greentree Affected Vehicle resulting from the failure of the Greentree Affected Vehicle to comply with the guarantee as to acceptable quality, below whichever of the following prices is lower:

(A) the price paid or payable by the first and second applicants for the Greentree Affected Vehicle; and

(B) the average retail price of the Greentree Affected Vehicle at the time of supply;

(ii) At least some Group Members are entitled to the reduction in the value of the Group Member's Affected Vehicle resulting from the failure of the Affected Vehicle to comply with the guarantee as to acceptable quality at the time it was supplied in the circumstances described in paragraph 1(b)(i) above, below whichever of the following prices is lower:

(A) the price paid or payable for the Affected Vehicle at the time of such supply; and

(B) the average retail price of the Affected Vehicle at the time of such supply.

75 The applicants and Group Members have also suffered loss or damage because of JLRA's and JLR UK's contraventions of sections 18, 29 and 33 of the ACL.

Particulars

(i) The particulars of loss or damage caused by JLRA's and JLR UK's contraventions of sections 18, 29 and 33 of the ACL are set out in Schedule 2 of this Statement of Claim.

(ii) Further particulars of the extent to which JLRA's and JLR UK's Misleading Conduct caused the applicants and Group Members to suffer loss or damage may be provided following discovery and expert evidence.

J. RELIEF

76 The applicants claim, in their own right and on behalf of Group Members, the relief specified in the originating application, namely:

(a) damages pursuant to section 236 of the ACL for loss or damage suffered by the applicants and Group Members because of JLRA's and JLR UK's contraventions of sections 18, 29 and 33 of the ACL;

(b) damages pursuant to sections 271 and 272 of the ACL for:

(i) the first and second applicants and at least some Group Members, for the reduction in value of the Affected Vehicles resulting from the failure to comply with the guarantee as to acceptable quality in section 54 of the ACL; and

(ii) other reasonably foreseeable loss or damage suffered by the applicants and Group Members because of the failure to comply with the guarantee as to acceptable quality in section 54 of the ACL,

including, at the conclusion of the initial trial:

(c) pursuant to subsections 33Z(1)(e) of the FCA Act, an award or awards of damages for Group Members, being damages consisting of specified amounts or amounts worked out in such manner as the Court specifies, in respect of:

(i) all of the damages described in paragraph 76(b)(i) above to which Group Members are entitled; and

(ii) some of the damages described in paragraph 76(b)(ii) above to which Group Members are entitled, being in respect of those heads of damages that are amenable to determination on a common basis; and

(d) in the alternative to paragraph 76(c) above, pursuant to subsection 33Z(1)(f) of the FCA Act, an award of damages in an aggregate amount without specifying amounts awarded in respect of individual Group Members, in respect of:

(i) all of the damages described in paragraph 76(b)(i) above to which Group Members are entitled; and

(ii) some of the damages described in paragraph 76(b)(ii) above to which Group Members are entitled, being in respect of those heads of damages that are amenable to determination on a common basis; and

(e) interest pursuant to section 51A of the FCA Act;

(f) costs; and

(g) such other orders as the Court thinks fit.

Date: ~~7 August~~ 20 December 2024



Signed by Lee Taylor
Lawyer for the applicants

This consolidated pleading was prepared by Matt Mackenzie of Gilbert + Tobin, Lee Taylor and Ronald Koo of Maurice Blackburn and Patrick Meagher and Peter Strickland of Counsel and settled by Stephen Free SC of Senior Counsel.

The amendments to this consolidated pleading were prepared by Matt Mackenzie of Quinn Emanuel, Ronald Koo of Maurice Blackburn and Patrick Meagher and Peter Strickland of Counsel and settled by Stephen Free SC of Senior Counsel.

Schedule 1: Particulars of loss or damage resulting from the failure of the Affected Vehicles to comply with the statutory guarantee as to acceptable quality

The first and second applicants

1 The first and second applicants say that they have suffered the following loss or damage:

(a) [not used] ~~the reduction in value of the Greentree Affected Vehicle resulting from the failure of the Greentree Affected Vehicle to comply with the guarantee as to acceptable quality, below whichever of the following prices is lower:~~

~~(i) the price paid or payable by the first and second applicants for the Greentree Affected Vehicle; and~~

~~(ii) the average retail price of the Greentree Affected Vehicle at the time of supply;~~

(b) excess taxes (GST and stamp duty) paid by the first and second applicants in connection with acquiring the Greentree Affected Vehicle, referable to a purchase price that did not account for the reduction in value of the Greentree Affected Vehicle resulting from the failure of the vehicle to comply with the guarantee as to acceptable quality;

(c) income forgone on days the first and second applicants were not able to work because the Greentree Affected Vehicle was being inspected, serviced and/or repaired for the purpose of seeking to address issues arising from the Vehicle Defects;

(d) the cost of fuel consumed by the Greentree Affected Vehicle in excess of that which would have been consumed, but for the Vehicle Defects; and

(e) loss of amenity, vexation, distress and disappointment.

2 It was reasonably foreseeable that the first and second applicants would suffer the loss and damage particularised in paragraphs 1(b) to 1(e) above as a result of the failure of the Greentree Affected Vehicle to comply with the guarantee in section 54 of the ACL.

The third applicant

2A The third applicant says that she has suffered the following loss or damage:

(a) [not used] ~~the reduction in value of the Jennings Affected Vehicle resulting from the failure of the Jennings Affected Vehicle to comply with the guarantee as to acceptable quality, below whichever of the following prices is lower:~~

~~(i) the price paid or payable by the third applicant for the Jennings Affected Vehicle; and~~

~~(ii) the average retail price of the Jennings Affected Vehicle at the time of supply~~;

(b) excess taxes (GST and stamp duty) paid by the third applicant in connection with acquiring the Jennings Affected Vehicle, referable to a purchase price that did not account for the reduction in value of the Jennings Affected Vehicle resulting from the failure of the vehicle to comply with the guarantee as to acceptable quality;

(c) excess luxury car tax paid in acquiring the Jennings Affected Vehicle, referable to a purchase price that did not account for the reduction in value of the Jennings Affected Vehicle resulting from the failure of that vehicle to comply with the guarantee as to acceptable quality;

(d) excess financing costs in connection with acquiring the Jennings Affected Vehicle, which financing costs were referable to a purchase price that did not account for the reduction in value of the Jennings Affected Vehicle resulting from the failure of that vehicle to comply with the guarantee as to acceptable quality;

(e) the cost of fuel consumed by the Jennings Affected Vehicle in excess of that which would have been consumed, but for the Vehicle Defects; and

(f) loss of amenity, vexation, distress and disappointment.

2B It was reasonably foreseeable that the third applicant would suffer the loss and damage particularised in paragraphs 2A(b) to (f) above as a result of the failure of the Jennings Affected Vehicle to comply with the guarantee in section 54 of the ACL.

Group Members

3 The applicants say that each Group Member has suffered the following loss or damage:

(a) [not used] ~~the reduction in value of the Group Member's Affected Vehicle resulting from the failure of the Affected Vehicle to comply with the guarantee as to acceptable quality at the time it was supplied in the circumstances described above in paragraph 1(b)(i) of this Consolidated Statement of Claim, below whichever of the following prices is lower:~~

~~(i) the price paid or payable for the Affected Vehicle at the time of such supply; and~~

~~(ii) the average retail price of the Affected Vehicle at the time of such supply; and~~

(b) [not used]

(c) the cost of fuel consumed by the Group Member's Affected Vehicle in excess of that which would have been consumed, but for the Vehicle Defects.

4 Further, the applicants say that at least some Group Members have suffered the following loss or damage:

(aa) excess GST paid in acquiring the Group Member's Affected Vehicle, referable to a purchase price that did not account for the reduction in value of the Group Member's Affected Vehicle resulting from the failure of that vehicle to comply with the guarantee as to acceptable quality;

(a) excess stamp duty paid in acquiring the Group Member's Affected Vehicle, referable to a purchase price that did not account for the reduction in value of the Group Member's Affected Vehicle resulting from the failure of that vehicle to comply with the guarantee as to acceptable quality;

(b) excess luxury car tax paid in acquiring the Group Member's Affected Vehicle, referable to a purchase price that did not account for the reduction in value of the Group Member's Affected Vehicle resulting from the failure of that vehicle to comply with the guarantee as to acceptable quality;

(c) excess financing costs incurred by those Group Members in connection with acquiring their Affected Vehicles, which financing costs were referable to a

purchase price that did not account for the reduction in value of the Group Member's Affected Vehicle resulting from the failure of that vehicle to comply with the guarantee as to acceptable quality;

(d) costs incurred in having the Group Member's Affected Vehicle inspected, serviced and/or repaired, or in having components of the Affected Vehicle replaced, for the purpose of seeking to address issues arising from the Vehicle Defects;

(e) income forgone on days the Group Member was not able to work because the Group Member's Affected Vehicle was being inspected, serviced and/or repaired for the purpose of seeking to address issues arising from the Vehicle Defects; and

(f) loss of amenity, vexation, distress and disappointment.

5 It was reasonably foreseeable that Group Members would suffer the loss and damage particularised in paragraphs 3(c) and paragraph 4 above, as a result of the failure of the Affected Vehicles to comply with the guarantee as to acceptable quality.

Schedule 2: Particulars of loss or damage suffered because of JLR<u>A's and JLR UK</u>'s contravention of sections 18, 29 and/or 33 of the ACL

The first and second applicants

1 The first and second applicants say that they have suffered the following loss or damage:

(a) The difference between the purchase price paid by the first and second applicants to acquire the Greentree Affected Vehicle and the true value of the Greentree Affected Vehicle as at the date of the acquisition;

(b) excess taxes (GST and stamp duty) paid by the applicants on the difference between the purchase price paid by the applicants to acquire the Greentree Affected Vehicle and the true value of the Greentree Affected Vehicle as at the date of the acquisition;

(c) income forgone on days the first and second applicants were not able to work because the Greentree Affected Vehicle was being inspected, serviced and/or repaired, or was having components of the Greentree Affected Vehicle replaced, for the purpose of seeking to address issues arising from the Vehicle Defects; and

(d) loss of amenity, vexation, distress and disappointment.

The third applicant

2A The third applicant says that she has suffered the following loss or damage:

(a) The difference between the purchase price paid by the third applicant to acquire the Jennings Affected Vehicle and the true value of the Jennings Affected Vehicle as at the date of the acquisition<u>, insofar as it has not been recovered upon any resale of the Affected Vehicle</u>;

(b) excess taxes (GST and stamp duty) paid by the third applicant on the difference between the purchase price paid by the third applicant to acquire the Jennings Affected Vehicle and the true value of the Jennings Affected Vehicle as at the date of the acquisition;

(c) excess luxury car tax paid by the third applicant on the difference between the purchase price paid by the third applicant to acquire the Jennings Affected

Vehicle and the true value of the Jennings Affected Vehicle as at the date of acquisition;

(d) excess financing costs paid by the third applicant on the difference between the purchase price paid by the third applicant to acquire the Jennings Affected Vehicle and the true value of the Jennings Affected Vehicle as at the date of acquisition; and

(e) loss of amenity, vexation, distress and disappointment.

Group Members

2 The applicants say that ~~each~~ at least some Group Members have ~~has~~ suffered the following loss or damage:

(a) the difference between the purchase price paid by the Group Member to acquire the Group Member's Affected Vehicle and the true value of the Group Member's Affected Vehicle as at the date of the acquisition, insofar as it has not been recovered upon any resale of the Affected Vehicle; and

(b) [not used].

3 Further, the applicants say that at least some Group Members have suffered the following loss or damage:

(aa) excess GST paid by the Group Member on the difference between the purchase price paid by the Group Member to acquire the Group Member's Affected Vehicle and the true value of the Group Member's Affected Vehicle as at the date of the acquisition;

(a) excess stamp duty paid by the Group Member on the difference between the purchase price paid by the Group Member to acquire the Group Member's Affected Vehicle and the true value of the Group Member's Affected Vehicle as at the date of the acquisition;

(b) excess luxury car tax paid by the Group Member on the difference between the purchase price paid by the Group Member to acquire the Group Member's Affected Vehicle and the true value of the Group Member's Affected Vehicle as at the date of the acquisition;

(c) excess financing costs incurred by the Group Member on the difference between the purchase price paid by the Group Member to acquire the Group

Member’s Affected Vehicle and the true value of the Group Member’s Affected Vehicle as at the date of the acquisition;

(d) costs incurred by the Group Member in having the Group Member's Affected Vehicle inspected, serviced and/or repaired, or in having components of the Affected Vehicle replaced, for the purpose of seeking to address issues arising from the Vehicle Defects;

(e) income forgone by the Group Member on days the Group Member was not able to work because the Group Member's Affected Vehicle was being inspected, serviced and/or repaired, or was having components of the Group Member’s Affected Vehicle replaced, for the purpose of seeking to address issues arising from the Vehicle Defects; and

(f) loss of amenity, vexation, distress and disappointment.

Certificate of lawyer

I, Lee Taylor, certify to the Court that, in relation to the amended consolidated statement of claim filed on behalf of the applicants, the factual and legal material available to me at present provides a proper basis for each allegation in the pleading.

Date: ~~7 August~~ 20 December 2024



Signed by Lee Taylor
Lawyer for the applicants